CB-OWS451 & OWL253 ELECTRICAL MECHANICAL DATA SHEET

Document Revision
Document number: 6258691
Release: Feb 29, 2012 11:56
Document version: 6

1 Table of content

1 Table of content
2 Introduction
- 2.1 Key features
- 2.2 Product variants
- 2.3 Block diagram cB-0941

3 Electrical interface and connectors
- 3.1 Pin numbering
- 3.2 Pin description
- 3.3 Electrical characteristics
- 3.4 Environmental characteristics
- 3.5 Mechanical characteristics
- 3.6 Hardware reset
- 3.7 Power control
- 3.8 Software overview

4 Antenna information
- 4.1 Surface mounted antenna (internal)
- 4.2 External antennas
- 4.3 Antenna accessories
- 4.4 Antennas

5 Mounting information
- 5.1 Module dimensions
- 5.2 Using the J2/J3 board-to-board connectors
- 5.3 Using press-fit nuts for mounting the module
- 5.4 Recommended M2 screw
- 5.5 Using the J6 PCB solder pads
- 5.6 Antenna issues

6 WLAN information
- 6.1 Radio sensitivity OFDM
- 6.2 Radio sensitivity DSSS

7 Regulatory information
- 7.1 Limitations
- 7.2 Declaration of conformity
- 7.3 IC and FCC compliance
- 7.4 UL listing information
- 7.5 Compliance with RoHS directive

8 Guidelines for efficient and safe use
- 8.1 General
- 8.2 Product care
- 8.3 Radio frequency exposure
- 8.4 Electronic equipment
- 8.5 Potentially explosive atmospheres
- 8.6 Safety compliance

9 Design examples
- 9.1 Basic design

2 Introduction

The IEEE 802.11abgn OEM Modules from connectBlue has been developed for integration in industrial devices. The modules are providing state of the art low power features, compatibility, robustness, and reliability. The modules minimizes the work needed to implement IEEE 802.11 in a device as it provides, together with the driver package, all software, hardware, type approval, EMC certification etc. It is developed for reliable, high demanding industrial devices and applications and delivers high performance. The connectBlue wireless LAN modules are available in different versions (see Product variants).

The wireless LAN modules are complete IEEE 802.11 implementations. The IEEE 802.11 modules has small form factors and the interface layout is the same as the Bluetooth and IEEE 802.15.4 modules from connectBlue, which enables customers to prepare their device for both wireless LAN, IEEE 802.15.4, and Bluetooth.

cB-0941 (OWS451i-06)	cB-0941 (OWL253i-04)
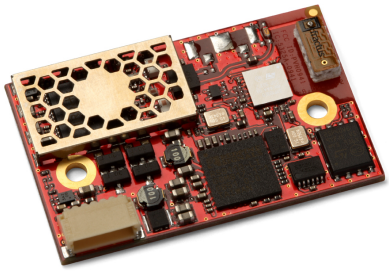	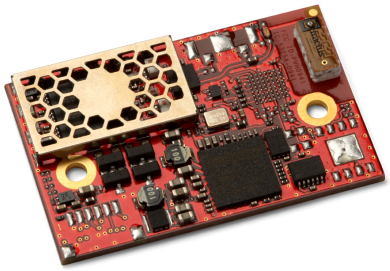

This electrical & mechanical data sheet is applicable to the following wireless LAN modules from connectBlue:

- cB-0941 (OWS451 and OWL253)

2.1 Key features

- Dual-band operation (IEEE 802.11-2007, abg, incl. single stream IEEE 802.11n)
- WEP, AES, and CRC-32 hardware accelerators
- WPA and WPA2 support - both personal and enterprise modes
- UART host interface (OWS451)
- SPI host interface (OWL253)
- Quality of Service: 802.11e and WMM
- Bluetooth co-location with PTA (Packet Traffic Arbitration) support
- Ad-hoc and infrastructure mode
- Radio type approved for Europe.
- Unlicensed Modular Transmitter Approval for US (FCC) and Canada (IC).
- Compliant with EMC standards.
- Industrial operating temperature range -40 to +85 °C (JST version limited to -25 to +85°C)
- Support for low power modes.
- Compatible with connectBlue Bluetooth and IEEE 802.15.4 modules
- Internal or external antenna
- Receive diversity

2.2 Product variants

The different mounting options of cB-0941 hardware (OWS451i/x -04/06 and OWL253i/x-04) are all based on the same PCB.
The module is Type Approved and referred in this document with the model name cB-0941.

Model family	Mounting option	FCC ID	IC	Description
cB-0941	OWL253i-04	PVH0941	5325A-0941	IEEE802.11abgn LAN module with internal antenna, board-to-board connector, solder-lands, high-speed SPI host interface
cB-0941	OWL253x-04	PVH0941	5325A-0941	IEEE802.11abgn LAN module with dual external antenna U.FL. connectors, board-to-board connector, solder-lands, high-speed SPI host interface
cB-0941	OWS451i-04	PVH0941	5325A-0941	IEEE802.11abgn Serial Port Adapter module with internal antenna, board-to-board connector, solder-lands, UART host interface
cB-0941	OWS451x-04	PVH0941	5325A-0941	IEEE802.11abgn Serial Port Adapter module with dual external antenna U.FL. connectors, board-to-board connector, solder-lands, UART host interface
cB-0941	OWS451i-06	PVH0941	5325A-0941	IEEE802.11abgn Serial Port Adapter module with internal antenna, board-to-board connector, solder-lands, JST connector, UART host interface
cB-0941	OWS451x-06	PVH0941	5325A-0941	IEEE802.11abgn Serial Port Adapter module with dual external antenna U.FL. connectors, board-to-board connector, solder-lands, JST connector, UART host interface

2.3 Block diagram cB-0941

2.3.1 OWS451

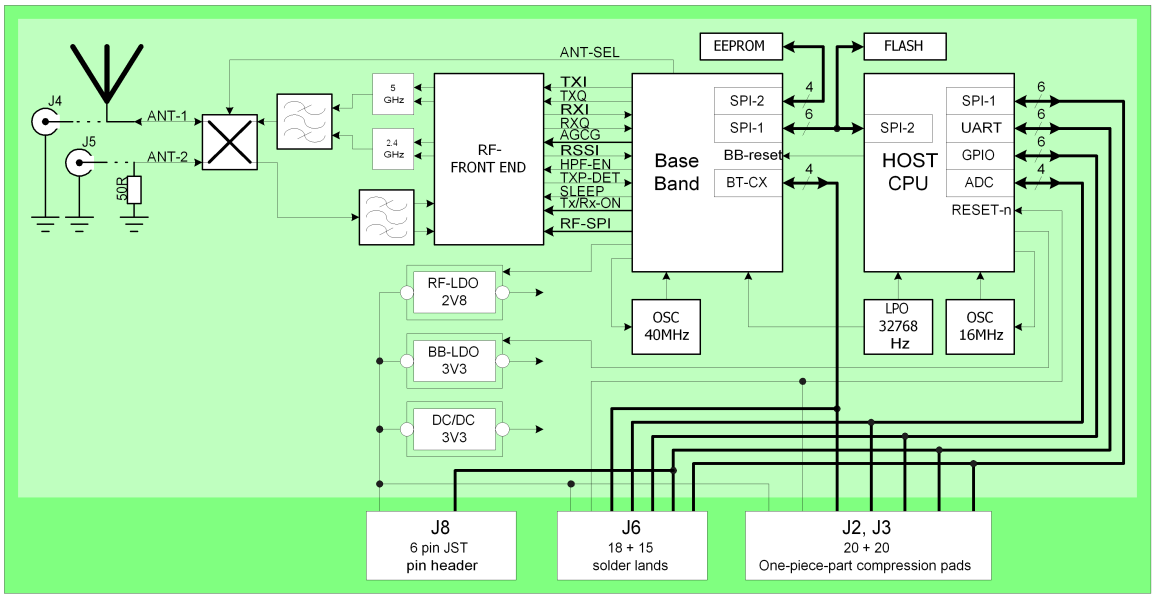

2.3.2 OWL253

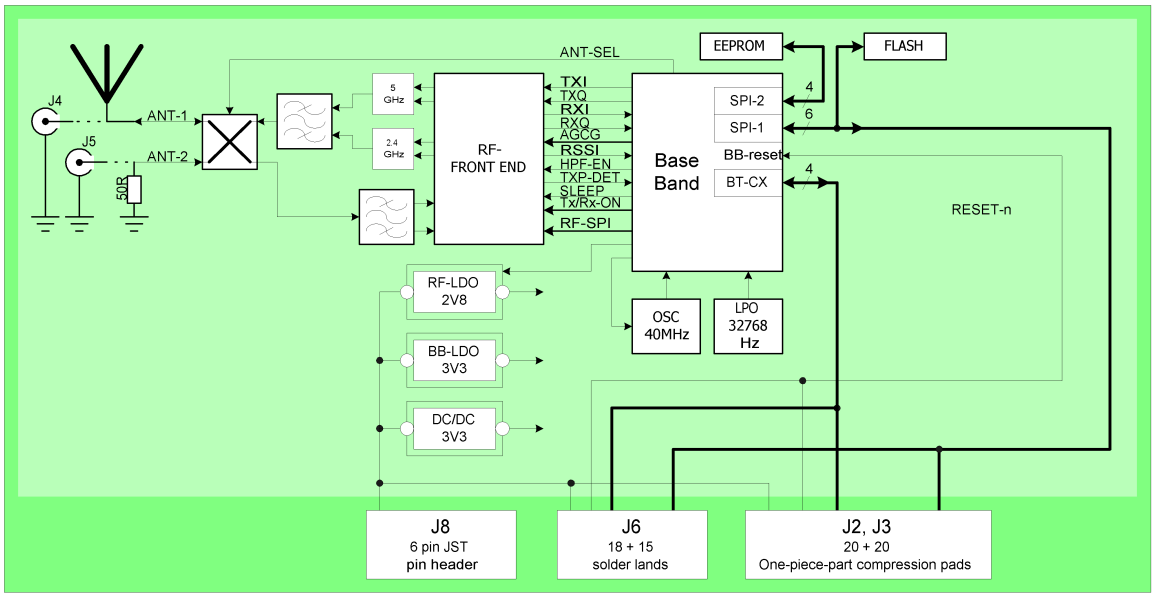

3 Electrical interface and connectors

This section describes the signals available on the module interface connectors. There are three ways of connecting:

- Via the PCB solder lands on the edge of the PCB, J6 (see figure below: Secondary side connectors). For more information see Section J6 Solder Lands Description.
- Via the 2 x 20-pin 1mm pitch board-to-board (one piece part) connectors J2 and J3. The J2 and J3 connectors exist on the module only as compression pads (see figure below: Secondary side connectors). These pads mates with the carrier board one-piece part connector. For more information see Section J2 Connector Description and J3 Connector Description.

Optional (OWS451 only):

- Via the JST connector, J8 (see figure below: Primary side connectors). The connector is a 6 poles pin header. The pitch is 1mm and the connector is from JST with part number SM06B-SRSS-TB. The SM06B-SRSS-TB connector is mated with the wire connector SHR-06V-S from JST. Other connector options are also available from JST. For more information see section J8 Connector Description. **Note:** the JST connector affects temperature range. See environmental characteristics for details.

3.1 Pin numbering

3.1.1 Primary side connectors

J8 is the JST connector located on the primary side of the module. A1 is the internal antenna.
J4 and J5 are U.FL connectors for external antennas. J4 is the primary antenna connector and J5 the auxiliary antenna connector.

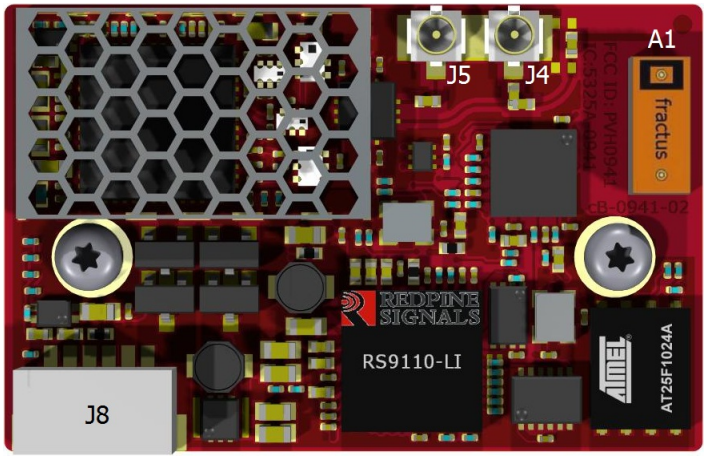

3.1.2 Secondary side connectors

J2 and J3 is the connectBlue board-to-board connector. The pin layout of the connector is compatible with all OEM Serial Port Adapters from connectBlue.
The J6 is the solder land connector.

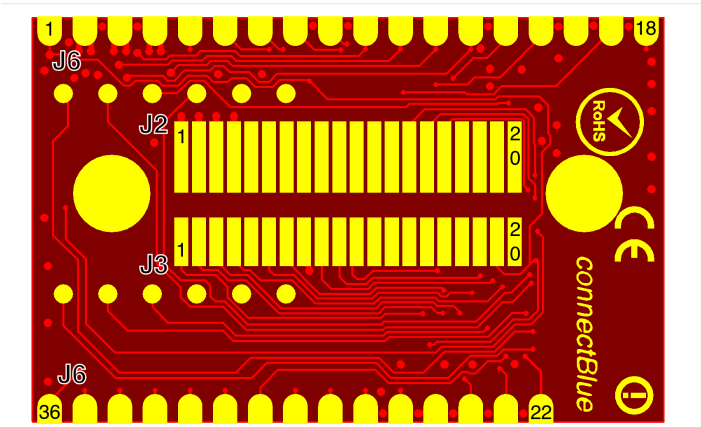

The solder lands of connector (J6) have a new layout compared to cB-OWSPA311g.

3.2 Pin description

3.2.1 J2, J3, J6, J8 connector description

J2	J3	J6	J8	Signal name	Signal level	Type	Module	Description
1,2	8	3, 25***	1	VSS	Ground	Power	All	GND
3,4	-	4	2	VCC	3.3 V	Power	All	3.3 - 5.5 VDC power supply
11	-	7		RED/Mode	CMOS	Out/In	OWS451	This signal is multiplexed: RED: red LED logic signal valid 600ms after power-up, active low with internal weak pull-up. See the Operating status section for more info. Mode: Not used. Used for selecting logic level mode (instead of RS232) for connectBlue products with internal RS232 driver. To be compatible with these products check the datasheet for these products about this signal.
12	-	6		Switch-0	CMOS	In	OWS451	Switch-0/Function switch. Active low with internal weak pull-up. Used for the "Connect on external event" function, see the Wireless LAN Serial Port Adapter AT command Specification for more information on the function switch. A secondary function is that the module will enter boot loader mode if switch-0 is active together with switch-1 at power-up. See section Switch-0 Signal for design examples.
13	-	8		GREEN/ Switch-1	CMOS	Out/In	OWS451	This signal is multiplexed: GREEN: gren-LED logic signal valid 500ms after power-up, active low. Switch-1/restore switch: Switch-1 signal is valid as input only during the first 500ms after power-up, after that its fuction changes to green LED. If this pin is pulled-down during power-up the unit restores all settings to factory defaults. The Switch-1 signal is active low with internal weak pull-up.
14	-	9	5	BLUE	CMOS	Out	OWS451	Logic Blue LED Signal (see the Operating status section). Active low. Note:Blue LED will flash when data is transfered. See section BLUE Signal for design examples.
15	-	10	5	UART-CTS*	CMOS	In	OWS451	Logic level UART Clear To Send, active low.
16	-	11	3	UART-TxD*	CMOS	Out	OWS451	Logic level UART Transmit Data, "0" = Low, "1" = High
17	-	12	6	UART-RTS*	CMOS	Out	OWS451	Logic level UART Request To Send, active low.
18	-	13	4	UART-RxD*	CMOS	In	OWS451	Logic level UART Receive Data, "0" = Low, "1" = High
19	-	5	-	UART-DTR*	CMOS	Out	OWS451	Logic level UART Data Terminal Ready, active low.
20	-	18, 30***	-	UART-DSR*	CMOS	In	OWS451	Logic level UART Data Set Ready, active low.
	6	28	-	SPI-CS0n	CMOS	In	OWL253	Logic level SPI chip select, active low.
	7	27	-	SPI-MOSI	CMOS	In	OWL253	Logic level SPI Master Output Slave Input
	9	36	-	SerialSelect-0	CMOS	Out	OWS451	Control signal for external serial transceivers. See Appendix Serial Interface section for more info.

	10	35	-	SerialSelect-1	CMOS	Out	OWS451	Control signal for external serial transceivers. See Appendix Serial Interface section for more info.
	11	26	-	SPI-CLK	CMOS	In	OWL253	Logic level SPI Clk input
-	13	24	-	SPI-MISO	CMOS	Out	OWL253	Logic level SPI Master Input Slave Output
-	14	23	-	SPI-Int	CMOS	Out	OWL253	Logic level SPI external interupt.
	15	14		PRI	CMOS	In	All	Bluetooth Priority arbitration signal. This pin indicates to a wireless LAN module that a Bluetooth module is, or will be, active to do high priority TX/RX. Wireless LAN does not transmit as long as this signal remains asserted. The pin should be left open when Bluetooth co-existence feature is not enabled.
	17	15		WL	CMOS	Out	All	WLAN Active arbitration signal. This pin indicates to a Bluetooth module that a wireless LAN module is, or will be, active to do TX/RX. When Bluetooth co-existence feature is not enabled this pin should be left open.
-	19	1	-	Reset-n	CMOS	In	All	Hardware reset. Active low. internal 100k ohm pull-up
-	20	2	-	3V3	3.3 V	Out	All	Regulated interface voltage for voltage level shifting, max 10mA.
5 - 10	1 - 5, 12, 16, 18	16, 17, 19 - 21, 29, 31 - 34	-					Reserved, do not connect.

***) Alternative signal pin recommended to use in new designs (both signal pins should be connected).

*) Logic level signals are CMOS logic level (-0.3V < VIL < 0.8V, 2.3V < VIH < 3.3V).

3.2.2 J4 Primary external antenna connector

J4 is the primary external antenna connector. It is used for both transmit and receive. The port impedance to match is 50 ohm.

J4 pin nr	Pin name	Signal level	Type	Description
1	Ant-1	RF	I/O	Primary external antenna port (50 ohm)

This connector is only available on OWS451x and OWL253x.

3.2.3 J5 Auxiliary external antenna connector

J5 is the auxiliary external antenna connector. It is used only for receiving and if the unit is configured for receive diversity mode. The unit never transmits RF through this antenna connector. The port impedance to match is 50 ohm.

J5 pin nr	Pin name	Signal level	Type	Description
1	Ant-1	RF	I	Auxiliary external antenna port (50 ohm)

This connector is only available on OWS451x and OWL253x.

1. UART signals are CMOS logic level (-0.3V < VIL < 0.9V, 2.1V < VIH < 3.3V)

3.3 Electrical characteristics

The cB-0941 family is designed to be fully interchangeable with the connectBlue Bluetooth product range. If the host product has space for the board, it is possible to choose freely between Bluetooth modules, e.g. cB-OEMSPA311i/x or cB-OEMSPA331i/x, or WLAN modules, e.g. OWSPA311gi/x, without any change of the host product. If you design your power supply for OWS451i/x the modules will be fully interchangeable.

3.3.1 Power supply

Read the safety notes in section Guidelines for Efficient and Safe Use before using the modules.

3.3.1.1 Supply voltage

Symbol	Parameter	Min	Typ.	Max	Unit
VDD	Supply voltage	3.3		5.5	V

3.3.1.2 Current consumption

3.3.1.2.1 cB-0941 (OWS451)

Symbol	Power Mode	State	Band	DTIM	Min	Typ.	Max	Unit
IDD @3.3VDC	Global	Reset				16		mA
		Start-up				130	150	mA
		Peak					350	mA
	Sleep	Idle, no connection				22		mA
		Managed, connected	2.4GHz	1		26		mA
		Managed, connected	5GHz	1		28		mA
		Managed, connected	2.4GHz	5		26		mA
		Managed, connected	5GHz	5		28		mA
		Managed, data throughput 1Mbit/s	2.4GHz			180		mA
		Managed, data throughput 1Mbit/s	5GHz			230		mA
	Online	Idle, no connection				22		mA
		Managed, connected	2.4GHz	1		26		mA
		Managed, connected	5GHz	1		28		mA
		Managed, connected	2.4GHz	5		26		mA
		Managed, connected	5GHz	5		28		mA
		Managed, data throughput 1Mbit/s	2.4GHz			180		mA
		Managed, data throughput 1Mbit/s	5GHz			230		mA
	Stop	Idle, no connection				7		mA
		Managed, connected	2.4GHz	1		26		mA
		Managed, connected	5GHz	1		28		mA
		Managed, connected	2.4GHz	5		26		mA
		Managed, connected	5GHz	5		28		mA
		Managed, data throughput UART 0.92Mbit/s	2.4GHz			180		mA
		Managed, data throughput UART 0.92Mbit/s	5GHz			230		mA

Power consumption in sleep, online, and stop mode are measured in managed mode using firmware release 2.8.1.

3.3.1.2.2 cB-0941 (OWS253)

Symbol	Power Mode	State	Band	DTIM	Min	Typ.	Max	Unit
IDD@VDD 3.3V	Global	Reset				16		mA
		Start-up				130	150	mA
		Peak					350	mA
	Power save	Idle, no connection				11		mA
		Managed, connected	2.4GHz	1		20		mA
		Managed, connected	5.0GHz	1		20		mA
		Managed, data throughput UDP 1Mbit/s	2.4GHz	1		230		mA
		Managed, data throughput UDP 1Mbit/s	5.0GHz	1		240		mA

Power consumption in power save mode (standard IEEE802.11 power save) is measured using firmware release 2.10.1. *IPerf* was used for throughput measurements. Configuration: iperf -c 192.168.0.1 -u -b 1M

3.3.2 Input/output signals

Symbol	Parameter	Min	Typ	Max	Unit
VIN Low	Logic LOW level input voltage on all logic	-0.3		0.85	V
VIN High	Logic HIGH level input voltage	2.1		3.3	V
VOUT Low	Logic LOW level output voltage			0.4	V
VOUT High	Logic HIGH level output voltage	2.5			V
I GPIO	Sink and source current			4.0	mA
C GPIO	Input capacitance		8		pF

3.3.3 UART (OWS451)

Parameter	Values
Standard baud rates	1200, 2400, 4800, 9600, 19200, 38400, 57600, 115200, 230400, 460800, 921600
High speed baud rates	1382400, 2764800
Data bits	8
Stop bits	1 or 2
Parity	none, odd, even
Hardware flow control	off or CTS/RTS

3.3.4 SPI (OWL253)

The SPI master should use polarity falling to rising with phase sampling on rising edge, shift on falling edge. Bitorder is MSB to LSB.

The SPI slave has the possibility to use both normal SPI mode, with shift and sample on rising and falling edges respectively, and an enhanced high speed mode where the shift and sample are both done on the rising edge. Since this moves the shift half a SPI cycle forward, the clock frequency can approximately be increased by a factor of two given that the signal path can handle this.

Using the high speed mode does not change the setup for the master.

In order to determine the SPI clock frequency that can be used, the signal propagation delay also need to be taken into consideration.

These propagation delays has to be measured for each individual setup. The clock frequency can then be approximated according to the following formulas.

$T_{clk} = (T_{od} + T_{prop} + T_{fall}) * 2$
$T_{clk\_high} = T_{od} + T_{prop} + T_{rise}$

Values measured on connectBlue development board cb-0940-02 with a Cheetah SPI master in room temperature can be seen in table below.

Parameter	Symbol	Typ.	Units
SPI_CLK, Clock rise time	T_{rise}	4.0	ns
SPI_CLK, Clock fall time	T_{fall}	4.0	ns
SPI_MISO, MISO propagation delay	T_{prop}	4.0	ns
SPI_CLK, Max clock freq. normal mode	F_{max}	40.0	MHz
SPI_CLK, Max clock freq. high speed mode	F_{high_max}	50.0 (limited by Cheetah)	MHz
SPI_CLK, Max clock freq. high speed mode	F_{high_max}	75.0 (theoretical)	MHz

Note that the measured F_{max} is very close to the limit of what is possible with respect to electrical properties and propagation delays on this particular setup and there is a signficant risk for bit errors. A reasonable limit using the above formula with the T_{od} from the chip specification below gives F_{max} as follows:

$T_{clk} = (T_{od\_max} + 2 * T_{prop} = 9.0 + 4.0 + 4.0) * 2 \Rightarrow F_{max} = \sim 29.4$ MHz
$T_{clk\_high} = T_{od\_max} + 2 * T_{prop} = 9.5 + 4.0 + 4.0 \Rightarrow F_{max} = \sim 57.1$ MHz

3.3.4.1 SPI chip specifications - Normal mode

Parameter	Symbol	Min	Max	Units
SPI_CLK	Tspi	0	25	MHz
SPI_CS, to output valid	Tcs	3.5	7.5	ns
SPI_CS, input setup time	Tcst	5.5		ns
SPI_MOSI, input setup time	Tsd	1		ns
SPI_MOSI, input hold time	Thd	1.5		ns
SPI_MISO, clock to output valid	Tod	4	9	ns

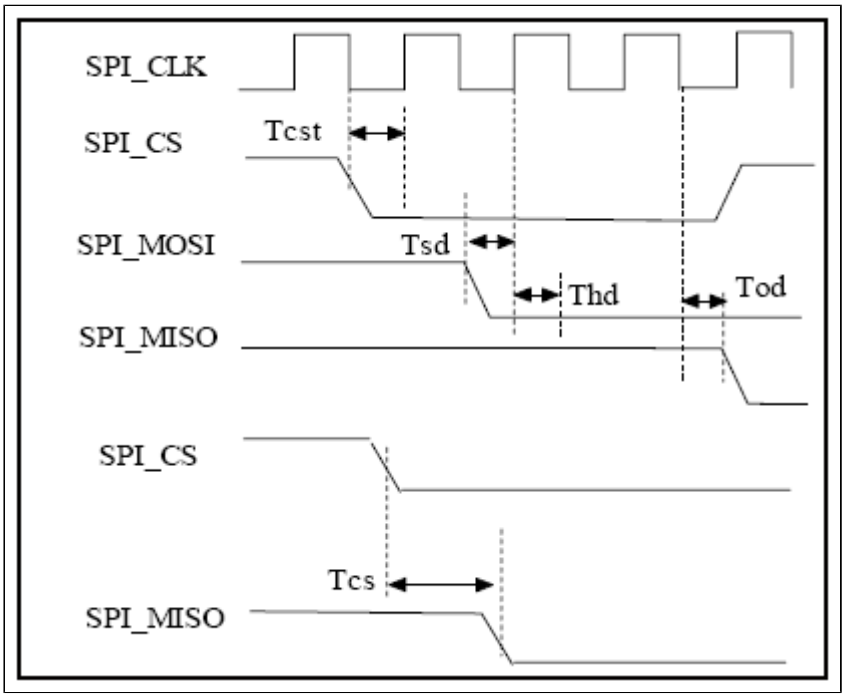

3.3.4.2 SPI chip specifications - High speed mode

Parameter	Symbol	Min	Max	Units
SPI_CLK	Tspi	0	75	MHz
SPI_CS, to output valid	Tcs	3.5	7.5	ns
SPI_CS, input setup time	Tcst	5.5		ns
SPI_MOSI, input setup time	Tsd	1		ns
SPI_MOSI, hold time	Thd	1.5		ns
SPI_MISO, clock to output valid	Tod	4	9.5	ns

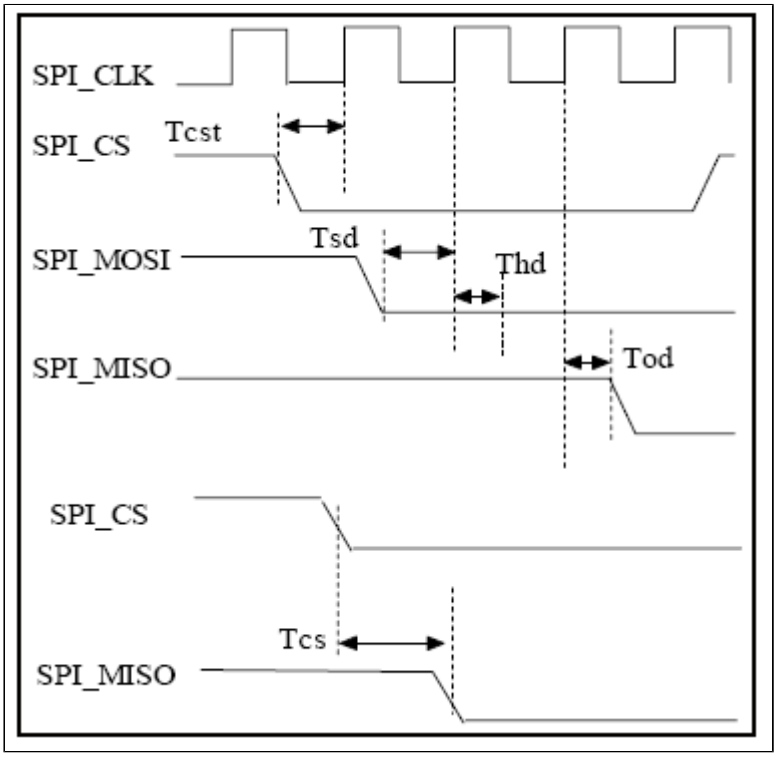

3.4 Environmental characteristics

Parameter	Product variant	Min	Typ	Max	Unit
Storage temperature	OWL253	-40		+125	degC
	OWS451	-40		+125	degC
	OWS451-06	-25		+85	degC
Operating temperature	OWL253	-40		+85	degC
	OWS451	-40		+85	degC
	OWS451-06	-25		+85	degC

When OWS451 is equipped with J8 (JST connector) the temperature range is reduced to -25 to +85 degC.

3.5 Mechanical characteristics

Parameter	Product variant		Value	Unit
Weight	cB-OWL253-04	Typ	3.5	g
	cB-OWS451-04	Typ	3.5	g
	cB-OWS451-06	Typ	3.8	g
Dimension	cB-OWL253-04	Typ	36 x 23 x 3.1	mm
	cB-OWS451-04	Typ	36 x 23 x 3.1	mm
	cB-OWL451-06	Typ	36 x 23 x 4.1	mm

3.6 Hardware reset

A hardware-reset input is available on the J1 and J3 connectors. An external reset source must be open drain or collector. The RESET-n pin is pulled-up internally with 220 kOhm (OWL253) or 56 kOhm (OWS451).

3.7 Power control

The wireless LAN modules can be operated in several different power modes.

- Standard IEEE802.11 power save
- UAPSD/WMM Power Save Support

3.8 Software overview

3.8.1 cB-0941 (OWL253)

Wireless LAN driver for OWL253 consists of a host driver in binary format or source code, and target firmware in binary format. In the overview picture below these two software parts are represented by the yellow boxes.

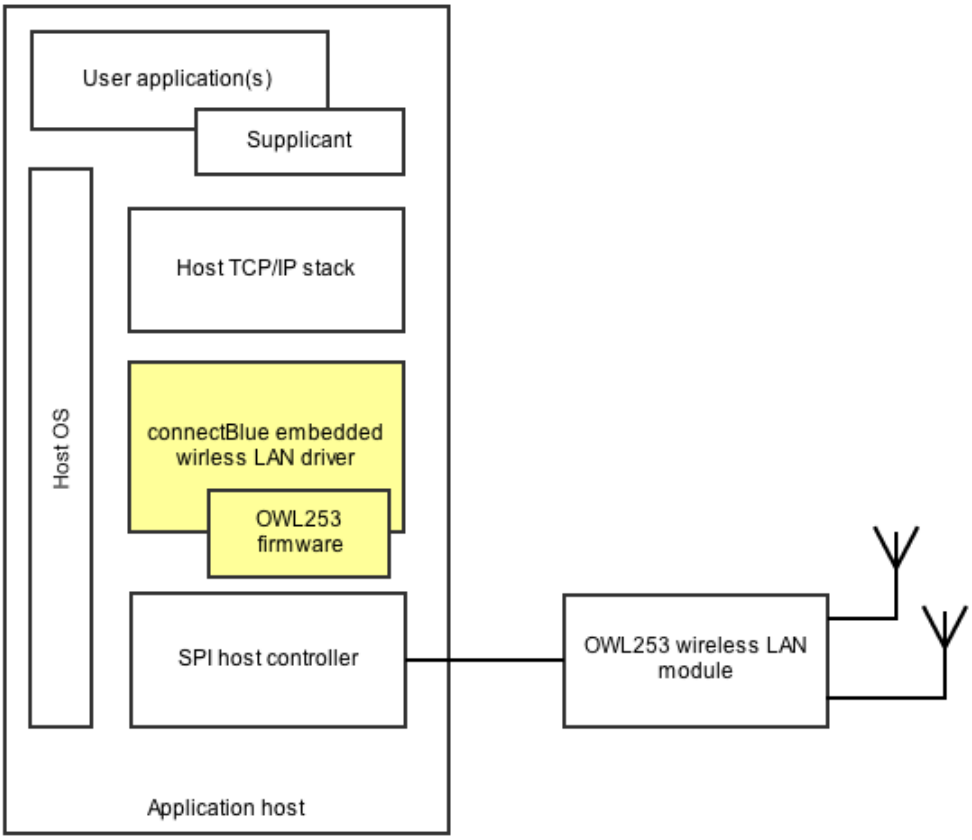

The host needs to be able to hold the target firmware since targets does not have on-board non-volatile memory. At startup, and at every reset or power cycle, the host driver will download firmware binaries to target before any wireless LAN operations can begin.

3.8.1.1 OS support

Software and drivers are available for the following operating systems:

1. Linux 2.6
2. WinCE 6.0 (in progress)
3. Embedded RTOS

Customized drivers for use in embedded systems are available upon request. Contact connectBlue for more information.

3.8.2 cB-0941 (OWS451)

The OWS451 is a serial port adapter with an UART interface and fully embedded TCP/IP stack and driver. The module is presented as a serial port/UART to the host. Raw serial data is sent to the module, which will package the data into TCP/UDP packages and transmit via Wireless LAN.

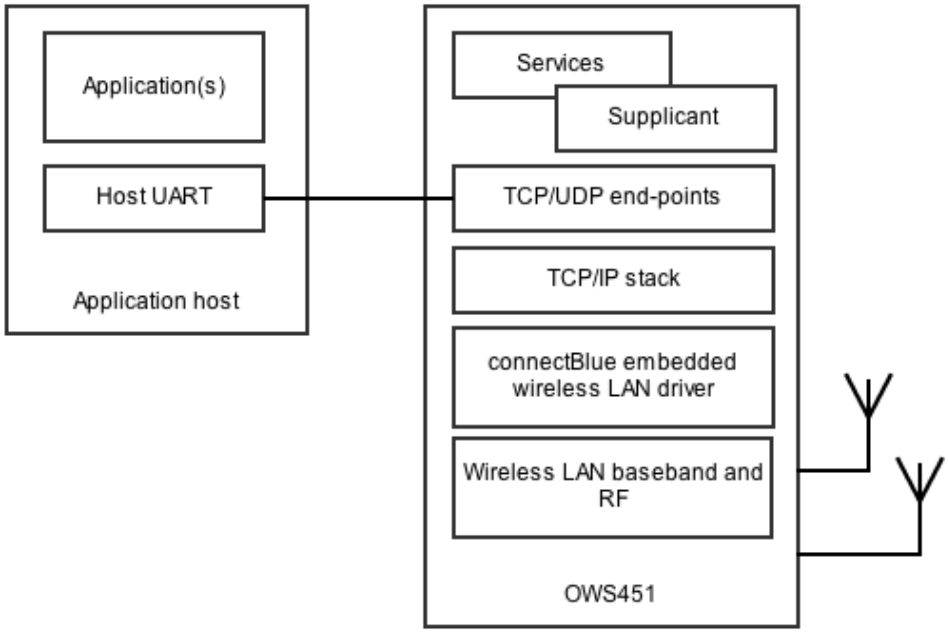

4 Antenna information

This chapter gives a quality overview of the different antenna options.

There are 2 different antenna options available:

- An internal surface mounted (SMD) dual band antenna.
- Two U.FL connectors for external antennas. Different types of external antennas are available.

4.0.2.1 Caution

This radio transmitter IC: 5325A-0941 cB-0941-02 has been approved by Industry Canada to operate with the antenna types listed below with the maximum permissible gain and required antenna impedance for each antenna type indicated. Antenna types not included in this list, having a gain greater than the maximum gain indicated for that type, are strictly prohibited for use with this device.

Cet émetteur radio IC: 5325A-0941 cB-0941-02 a été approuvé par Industry Canada pour fonctionner avec les types d'antenne énumérés ci-dessous avec le gain maximum autorisé et l'impédance nécessaire pour chaque type d'antenne indiqué. Les types d'antenne ne figurant pas dans cette liste et ayant un gain supérieur au gain maximum indiqué pour ce type-là sont strictement interdits d'utilisation avec cet appareil.

4.1 Surface mounted antenna (internal)

Part number	cB-0941 (OWL253i / OWS451i)
Antenna	FR05-S1-NO-1-004
Manufacturer	Fractus
Gain	0 dBi @ 2.4GHz 3 dBi @ 5GHz
avg. VSWR	3.1 @ 2.4GHz 2.3 @ 5GHz
avg. Efficiency	22% @ 2.4GHz 39% @ 5GHz
Antenna size (LxWxH)	7 x 3 x 2 mm
Comments	The antenna gain is very dependent of the mounting of the module. The unit cannot be mounted in a metal-shielded enclosure with this antenna.

4.1.1 Radiation patterns

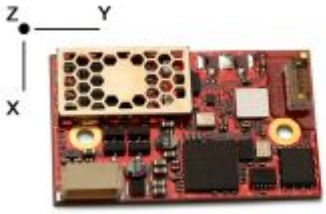

4.1.1.1 Radiation Pattern Cuts @2450 MHz – Free Space

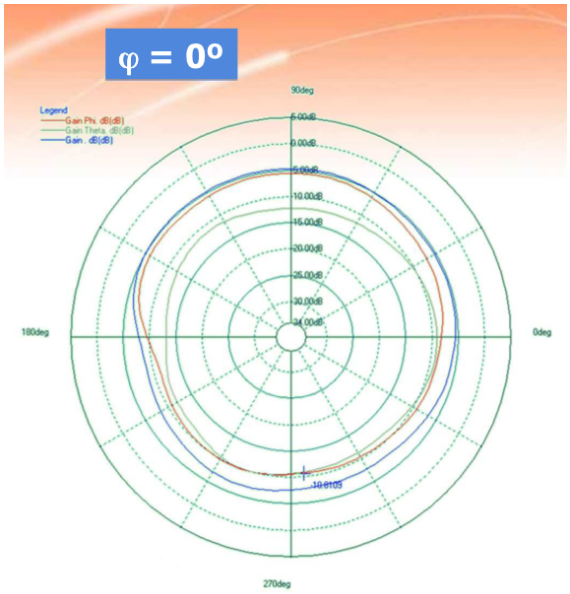

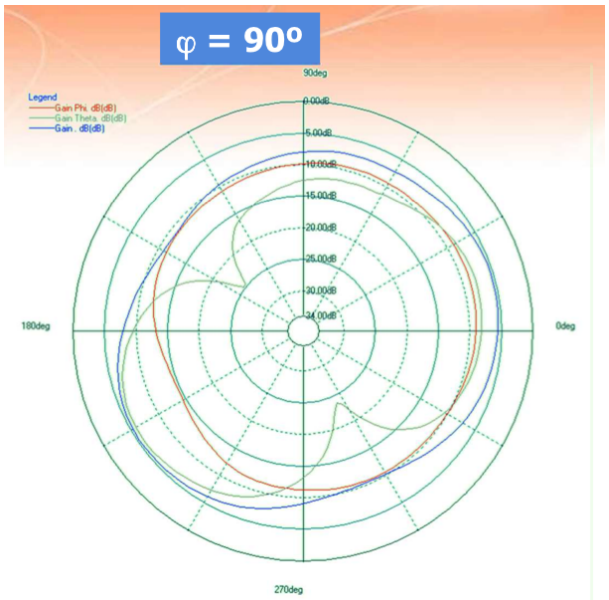

4.1.1.2 Radiation Pattern Cuts @5400 MHz – Free Space

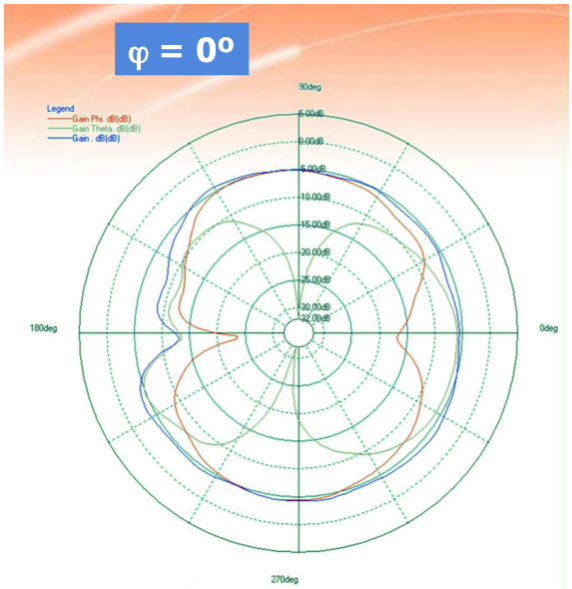

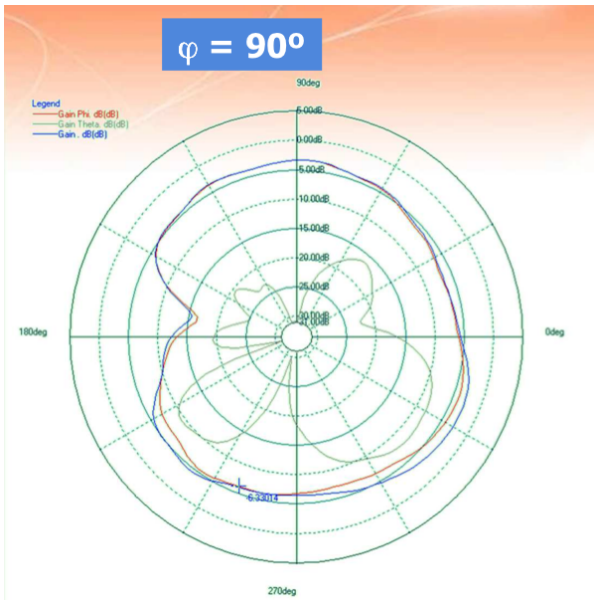

4.2 External antennas

The external antennas are connected to the module with the on board U.FL connectors. Some antennas are connected directly to the U.FL connector and some are connected via a U.FL to SMA (cB-ACC-18 or cB-ACC-48) or U.FL to reversed polarity SMA (cB-ACC-38) adapter cable.

The sections below lists the antennas that are included in the radio type approvals of the module. For each antenna the "Approvals" field defines in what country/region the antenna is allowed to use. Definitions of the "Approvals" field are:

- **FCC** - The antenna is included in the FCC test reports, and thus approved for use in countries that accept the FCC radio approvals, primarily US.
- **IC** - The antenna is included in the IC (Industrie Canada) test reports, and thus approved for use in countries that accept the IC radio approvals, primarily Canada.
- **R&TTE** - The antenna is included in the R&TTE test reports, and thus approved for use in countries that accept the R&TTE radio approvals, primarily the European countries.

In general, antennas with Reverse Polarity SMA connector or U.FL connector are included in FCC, IC and R&TTE radio tests. Antennas with SMA connector are not allowed to be used in Canada and USA due to FCC/IC regulations but are in general included in R&TTE radio tests.

Antennas with a part number in the form "cB-ACC-XX" are available for orders via the connectBlue distribution network.
For information about other antennas please contact connectBlue

4.3 Antenna accessories

Part Number	**cB-ACC-18 / cB-ACC-48**	
Name	U.FL to SMA adapter cable	
Connector	U.FL and SMA jack (outer thread and pin receptacle)	
Cable length	120 mm	
Cable loss	Less than 0.5 dB	
Comment	The SMA connector can be mounted in a panel	
Approval	R&TTE	

Part Number	**cB-ACC-38**	
Name	U.FL to Reverse Polarity SMA adapter cable	
Connector	U.FL and Reverse Polarity SMA jack (outer thread and pin)	
Cable length	120 mm	
Cable loss	Less than 0.5 dB	
Comment	The Reverse Polarity SMA connector can be mounted in a panel	
Approval	FCC, IC, R&TTE	

4.4 Antennas

4.4.1 Recommended antennas

Part Number	cB-ACC-53	
Name	Ex-IT WLAN RP-SMA (dual-band)	
Manufacture	ProAnt	
Polarization	Vertical	
Gain / Imp.	+3.0 dBi / 50ohm @ 2.4 GHz +3.0 dBi / 50ohm @ 5 GHz	
Size	Ø 10 x 107 mm	
Connector	Reverse Polarity SMA plug (inner thread and pin receptacle)	
Comment	To be used together with the U.FL to RP-SMA adapter cable (cB-ACC-38)	
Approval	FCC, IC, R&TTE	

Part Number	cB-ACC-63	
Name	Ex-IT 2400-MHF 28-001	
Manufacture	ProAnt	
Polarization	Vertical	
Gain / Imp.	+2.0 dBi / 50ohm @ 2.4 GHz	
Size	Ø 12 x 28 mm	
Cable length	100 mm	
Connector	U.FL	
Comment	To be connected to the U.FL connector on the PCB	
Approval	FCC, IC, R&TTE	

Part Number	cB-ACC-61	
Name	Ex-IT 2400-RP-SMA 28-001	
Manufacture	ProAnt	
Polarization	Vertical	
Gain / Imp.	+2.0 dBi / 50ohm @ 2.4 GHz	
Size	Ø 12 x 28 mm	
Connector	Reverse Polarity SMA plug (inner thread and pin receptacle)	
Comment	To be used together with the U.FL to RP-SMA adapter cable (cB-ACC-38)	
Approval	FCC, IC, R&TTE	

Part Number	cB-ACC-64	
Name	Ex-IT 2400-RP-SMA 70-002	
Manufacture	ProAnt	
Polarization	Vertical	
Gain / Imp.	+3.0 dBi / 50ohm @ 2.4 GHz	
Size	Ø 10 x 86 mm	
Connector	Reverse Polarity SMA plug (inner thread and pin receptacle)	
Comment	To be used together with the U.FL to RP-SMA adapter cable (cB-ACC-38)	
Approval	FCC, IC, R&TTE	

Part Number	cB-ACC-60	
Name	Ex-IT 2400-MHF 70-001	
Manufacture	ProAnt	
Polarization	Vertical	
Gain / Imp.	+3.0 dBi / 50ohm @ 2.4 GHz	
Size	Ø 10 x 70 mm	
Cable length	100 mm	
Connector	U.FL	
Comment	To be connected to the U.FL connector on the PCB	
Approval	FCC, IC, R&TTE	

Part Number	cB-ACC-55	
Name	InSide WLAN (dual band)	
Manufacture	ProAnt	
Polarization	Vertical	
Gain / Imp.	+3.0 dBi / 50ohm @ 2.4 GHz +3.0 dBi / 50ohm @ 5 GHz	
Size	27 x 12 mm (triangular)	
Cable length	100 mm	
Connector	U.FL	
Comment	To be connected to the U.FL connector on the PCB	
Approval	FCC, IC, R&TTE	

Part Number	cB-ACC-67	
Name	OutSide-2400	
Manufacture	ProAnt	
Polarization	Vertical	
Gain / Imp.	+3.0 dBi / 50ohm @ 2.4 GHz	
Size	36 x 18 x 16 mm	
Cable length	70 mm	
Connector	U.FL	
Comment	To be connected to the U.FL connector on the PCB	
Approval	FCC, IC, R&TTE	

Part Number	cB-ACC-66	
Name	FlatWhip 2400	
Manufacture	ProAnt	
Gain / Imp.	+3.0 dBi / 50ohm @ 2.4 GHz	
Size	Ø 50.0 x 30.0 mm	
Connector	SMA plug (inner thread and pin)	
Comment	To be used together with the U.FL to SMA adapter cable (cB-ACC-18 or cB-ACC-48)	
Approval	R&TTE	

4.4.2 Alternative antennas

The alternative antennas are available for backward compability but not recommended for new designs.

Part Number	cB-ACC-27	
Name	WCR-2400-IP04	
Manufacture	Centurion	
Polarization	Vertical	
Gain / Imp.	+2.0 dBi / 50ohm @ 2.4 GHz	
Size	Ø 12 x 76 mm	
Cable length	100 mm	
Connector	U.FL	
Comment	To be connected to the U.FL connector on the PCB	
Approval	FCC, IC, R&TTE	

Part Number	cB-ACC-54	
Name	Ex-IT WLAN SMA (dual-band)	
Manufacture	ProAnt	
Polarization	Vertical	
Gain / Imp.	+3.0 dBi / 50ohm @ 2.4 GHz +3.0 dBi / 50ohm @ 5 GHz	
Size	Ø 10 x 107 mm	
Connector	SMA plug (inner thread and pin)	
Comment	To be used together with the U.FL to SMA adapter cable (cB-ACC-18 or cB-ACC-48)	
Approval	R&TTE	

Part Number	cB-ACC-36	
Name	WCR-2400-RP-SMRP	
Manufacture	Centurion	
Polarization	Vertical	
Gain / Imp.	+2.0 dBi / 50ohm @ 2.4 GHz	
Size	Ø 12 x 76 mm	
Connector	Reverse Polarity SMA plug (inner thread and pin receptacle)	
Comment	To be used together with the U.FL to RP-SMA adapter cable (cB-ACC-38)	
Approval	FCC, IC, R&TTE	

Part Number	—	
Name	PSTG0-2400HS	
Manufacture	MobileMark	
Polarization	Vertical	
Gain / Imp.	+0 dBi / 50ohm @ 2.4 GHz	
Size	Ø 12 x 32 mm	
Connector	Reverse Polarity SMA plug (inner thread and pin receptacle)	
Comment	To be used together with the U.FL to RP-SMA adapter cable (cB-ACC-38)	
Approval	FCC, IC, R&TTE	

Part Number	cB-ACC-21	
Name	R380.500.127	
Manufacture	Pulse	
Polarization	Vertical	
Gain / Imp.	+2.0 dBi / 50ohm @ 2.4 GHz	
Size	Ø 14.3 x 61.4 mm	
Connector	SMA plug (inner thread and pin)	
Comment	To be mounted on the U.FL to SMA adapter cable (cB-ACC-18 or cB-ACC-48)	
Approval	R&TTE	

Part Number	—	
Name	R380.500.125	
Manufacture	Pulse	
Polarization	Vertical	
Gain / Imp.	+2.0 dBi / 50ohm @ 2.4 GHz	
Size	Ø 14.3 x 61.4 mm	
Connector	Reverse Polarity SMA plug (inner thread and pin receptacle)	
Comment	To be used together with the U.FL to RP-SMA adapter cable (cB-ACC-38)	
Approval	FCC, IC, R&TTE	

Part Number	**—**	
Name	R380.500.124	
Manufacture	Pulse	
Polarization	Vertical	
Gain / Imp.	+2.0 dBi / 50ohm @ 2.4 GHz	
Size	Ø 14.3 x 61.1 mm	
Connector	SMA plug (inner thread and pin)	
Comment	The difference compared to the R380.500.127 antenna is that the R380.500.124 antenna has a seal ring. To be mounted on the U.FL to SMA adapter cable (cB-ACC-18 or cB-ACC-48)	
Approval	R&TTE	

Part Number	**—**	
Name	R380.500.139	
Manufacture	Pulse	
Polarization	Vertical	
Gain / Imp.	+2.0 dBi / 50ohm @ 2.4 GHz	
Size	Ø 14.3 x 61.1 mm	
Connector	Reverse Polarity SMA plug (inner thread and pin receptacle)	
Comment	The difference compared to the R380.500.125 antenna is that the R380.500.139 antenna has a seal ring. To be used together with the U.FL to RP-SMA adapter cable (cB-ACC-38)	
Approval	FCC, IC, R&TTE	

Part Number	cB-ACC-28	
Name	NanoBlue-IP04	
Manufacture	Centurion	
Polarization	Vertical	
Gain / Imp.	+2.0 dBi / 50ohm @ 2.4 GHz	
Size	47.8 x 12.7 mm	
Cable length	100 mm	
Connector	U.FL	
Comment	To be connected to the U.FL connector on the PCB	
Approval	FCC, IC, R&TTE	

Part Number	cB-ACC-17	
Name	PlanTec m70cxr	
Manufacture	Reel	
Polarization	Vertical	
Gain / Imp.	+1.0 dBi / 50ohm @ 2.4 GHz	
Size	Ø 76.0 x 20.7 mm	
Cable length	20/100/300 cm	
Connector	SMA plug (inner thread and pin receptacle)	
Comment	To be used together with the U.FL to SMA adapter cable (cB-ACC-18 or cB-ACC-48)	
Approval	R&TTE	

Part Number	cB-ACC-37	
Name	PlanTec m70cxr	
Manufacture	Reel	
Polarization	Vertical	
Gain / Imp.	+1.0 dBi / 50ohm @ 2.4 GHz	
Size	Ø 76.0 x 20.7 mm	
Cable length	20/100/300 cm	
Connector	Reverse Polarity SMA plug (inner thread and pin receptacle)	
Comment	To be used together with the U.FL to RP-SMA adapter cable (cB-ACC-38)	
Approval	FCC, IC, R&TTE	

4.4.3 Customer specific antennas

Part Number	—
Name	InSide EPA WLAN
Manufacture	ProAnt
Polarization	Circular
Gain / Imp.	+3.0 dBi / 50 ohm @ 5 GHz
Size	66 x 90 x 36 mm
Connector	U.FL-R-SMT
Comment	Frequency 5150 - 5350 MHz (5.0 - 6.0 GHz)
Approval	FCC, IC, R&TTE

Part Number	—
Name	Inside EPA 2400
Manufacture	ProAnt
Polarization	Mixed horizontal and vertical
Gain / Imp.	+3.0 dBi / 50 ohm @ 2.4 GHz
Size	66 x 90 x 36 mm
Connector	U.FL-RSMT
Comment	Frequency 2400 - 2485 MHz
Approval	FCC, IC, R&TTE

Part Number	—
Name	SDM2-2400 / 1575
Manufacture	Mobile Mark
Polarization	Vertical
Gain / Imp.	+2.0 dBi / 50 ohm @ 2.4 GHz
Size	Ø 65.0 x 28.6 mm
Cable length	200 mm
Connector	U.FL
Comment	Frequency 2400 - 2500 MHz
Approval	FCC, IC, R&TTE

5 Mounting information

5.1 Module dimensions

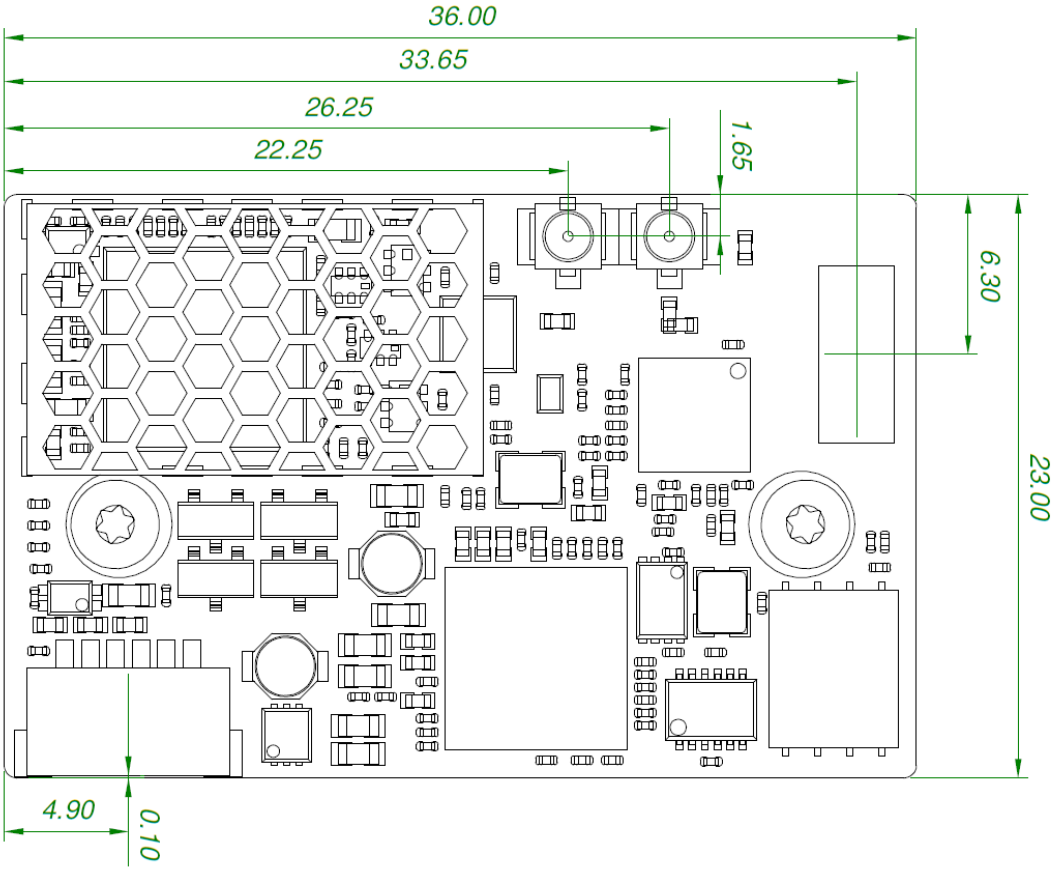

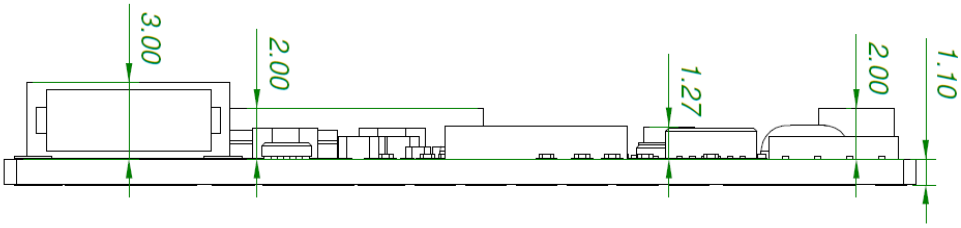

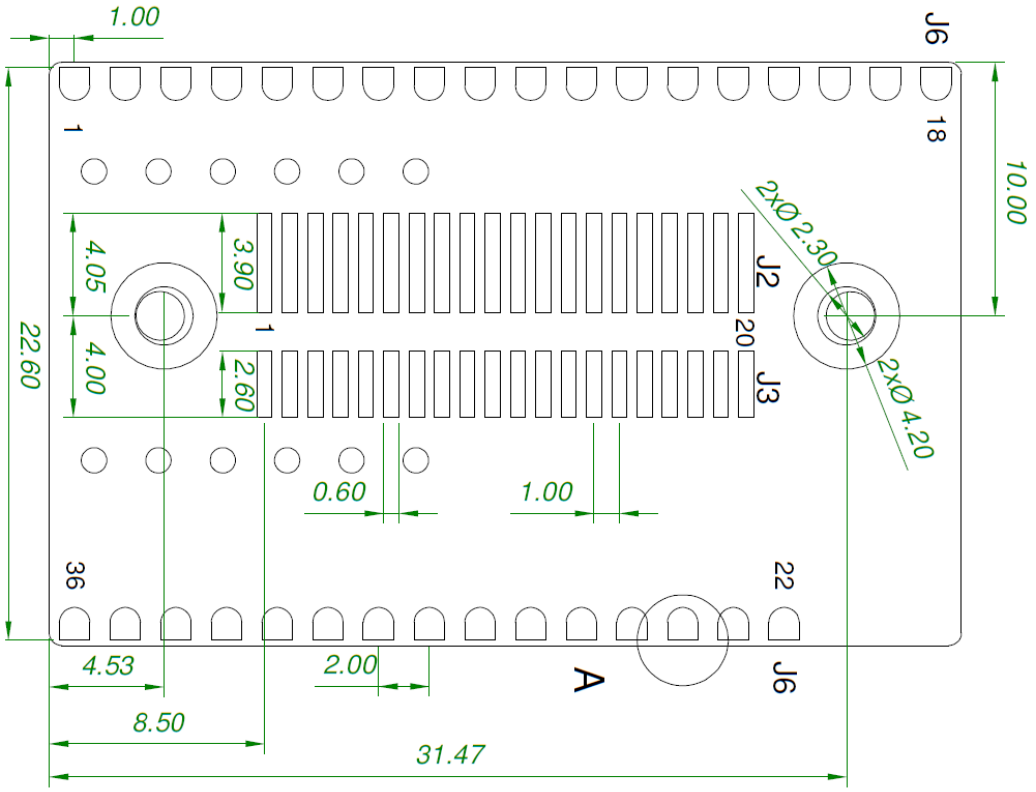

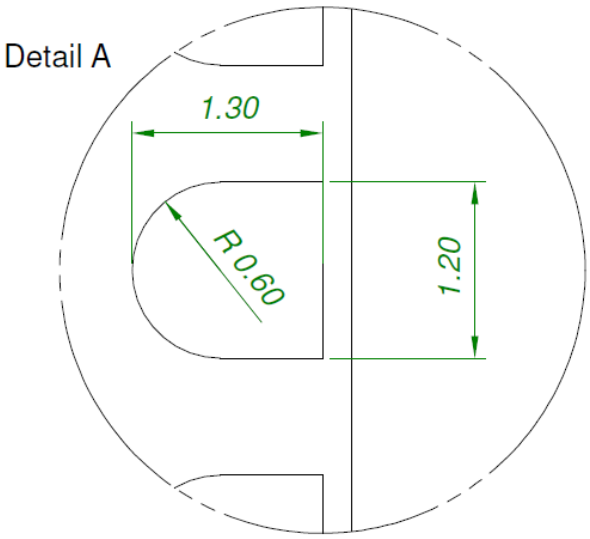

Tolerances:

1. Outline dimensions +/- 0.1mm
2. Drilled hole to outline: +/- 0.05mm

5.1.1 Mounting holes

There are 2 x 2.3mm mounting holes on cB-0941. The reasons for the 2.3mm holes are that the threaded M2 holes on the single and double row connectors are not aligned. The outer tangents of the 2.3mm holes align the module if the single row connectors are used and the inner if double row connectors are used (see Figure 11).
Choose the outer tangent (CC distance 27.24mm) if the module is aligned and mounted with some other technique based on M2 screws (e.g. press-fit nuts), see Figure 12.

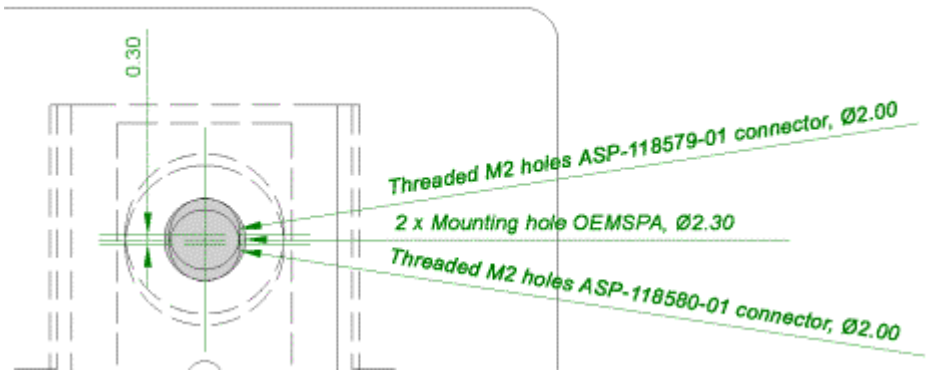

5.2 Using the J2/J3 board-to-board connectors

The board-to-board connector should be a 1 mm pitch one-piece part connector. The recommended manufacture is Samtec with many connector options available.
Chapter 2 contains more information about the connector and the electrical interface.

5.2.1 Single row connectors

The single row connector SEI-120-02 can be used if only J2 is needed.
This connector has a profile height of 1.65 mm and this has to be considered if components are to be mounted on the motherboard under the OEM Serial Port Adapter board.
There are alignment pins on the bottom side of the connector.
The connector is available with M2 threaded inserts that fit the mounting holes on the board (see section Suitable One-Piece Part Connectors). You may screw the OEM Serial Port Adapter board directly into these inserts. If you want to have a tighter and more secure mounting, you may use longer screws and secure it using a nut on the backside of the motherboard.
Another way to mount the module is to use press-fit nuts on the motherboard and skip the M2 threads on the connector, see section Using Press-Fit Nuts for Mounting the Module for more information about press-fit nuts.

Table 8: Single row connectors from Samtec.

Samtec order number	Quote number	Equivalent part	Package	Remark
ASP-118645-01	55392	SEI-120-02-GF-S-AB	Tube	Align pin on bottom side only
ASP-118645-02	55392	SEI-120-02-GF-S-AB-TR	Tape-n-Reel	Align pin on bottom side only
ASP-118579-01	55392	SEI-120-02-GF-S-M-AB	Tube	With M2 threaded inserts and align pin on bottom side only
ASP-118579-02	55392	SEI-120-02-GF-S-M-AB-TR	Tape-n-Reel	With M2 threaded inserts and align pin on bottom side only

When ordering connectors from Samtec or an official Samtec distributor, please use the ASP order number and refer to the connectBlue global quote number for best price. For technical questions regarding the Samtec connectors please contact connectBlue or Samtec at (Scandinavia@samtec.com).

See Figure 10 for more information about the connector and necessary measurements on the motherboard. The large mounting holes on the motherboard are designed for press-fit nuts and could be smaller if press-fit nuts are not used. The mounting holes are aligned with the outer tangent of the 2.3mm mounting holes of the module (see section Mounting Holes).

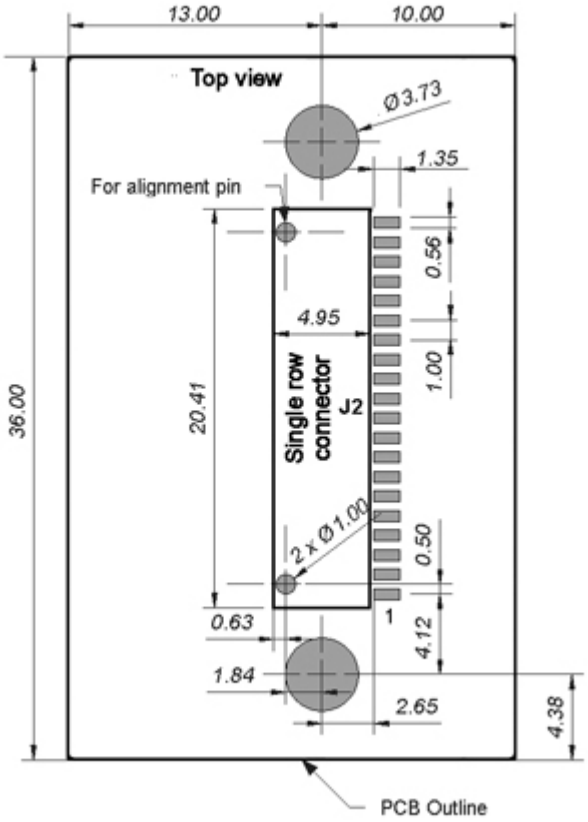

Host PCB layout [mm] for single row connector.

5.2.1.1 Double row ASP-118580-01 connector

This connector is a double row connector and connects both J2 and J3. It connector has a height of 3.0 mm and this has to be considered if components are to be mounted on the motherboard under the board. The connector is also available with a height of 6.0 mm and 10.0 mm (The FSI-120 serie from Samtec).
There are alignment pins on the bottom side of the connector.
The connector is available with M2 threaded inserts (ASP-118580-01) that fit the mounting holes on the board. You may screw the board directly into these inserts. If you want to have a tighter and more secure mounting you may use longer screws and secure it using a nut on the backside of the motherboard.

Samtec order number	Quote number	Equivalent part	Package	Remark
REF-120018-01	55392	FSI-120-03-G-D-M-AB	Tube	With M2 threaded inserts and align pin on bottom side only
REF-120018-02	55392	FSI-120-03-G-D-M-AB-K-TR	Tape-n-Reel	With M2 threaded inserts and align pin on bottom side only

When ordering connectors from Samtec or an official Samtec distributor, please use the REF order number and refer to the connectBlue global quote number for best price. For technical questions regarding the Samtec connectors please contact connectBlue or Samtec at Scandinavia@samtec.com.

See figure below for more information about the connector and necessary measurements on the motherboard. The large mounting holes on the motherboard are designed for press-fit nuts and could be smaller if press-fit nuts are not used.

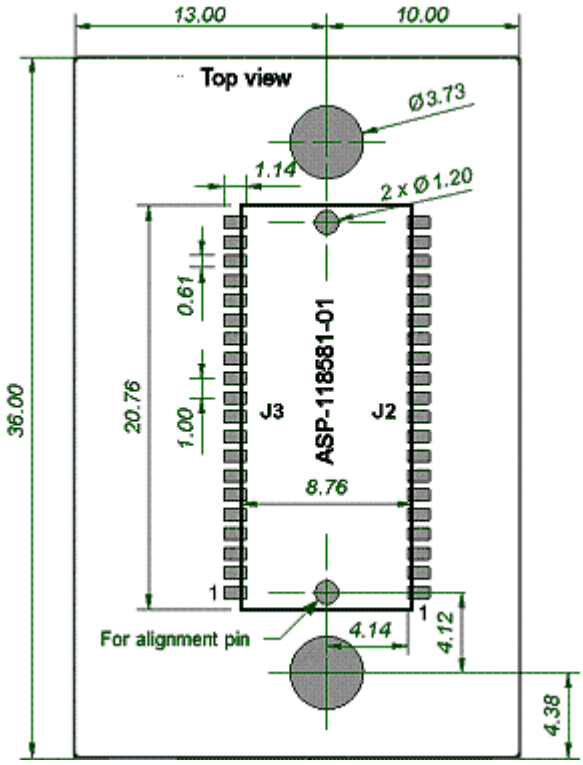

5.3 Using press-fit nuts for mounting the module

A press-fit nut is pressed into the PCB from the bottom side with a special press tool. M2 sized press-fit nuts are suitable for the modules (see Figure 10 and Figure 11) and are manufactured by PEM Fastening Systems (www.pemnet.com), part no KFS2-M2 (see Figure 12). Be careful with the distance between the nuts regarding alignment, see the Mounting Holes section.

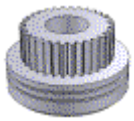

Spacer-pipes are recommended to use between the PCBs when press-fit nuts are used.

5.4 Recommended M2 screw

If a double-row connector with threaded inserts or press-fit nuts are used, then recommended for mounting of modules is a ISO 7380 M2 compatible screw. A suitable screw is the BN6404 from Bossard, www.bossard.com, with TORX T6 head cap. See figure below.

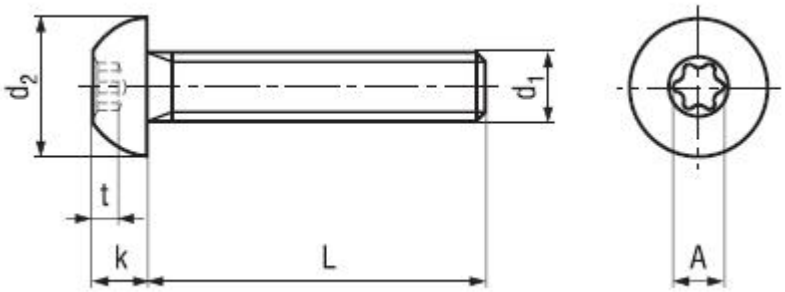

Parameter	Value	Unit
d2	3.5	mm
k max	1.3	mm
t max	0.8	mm
A	2.0	mm

If other type of screw is used please ensure that d2 is less than 3.8 mm otherwise components near the mounting holes can be damaged.

5.5 Using the J6 PCB solder pads

5.5.1 Host board

The host PCB footprint should not contain any traces or vias under the module except the pads interfacing the J6 pads to avoid contact with traces/vias on the module. The host pads which are soldered to the J6 pads should reach 0.5-1.0mm under the PCB and some mm outside the module. No other pads than the J6 should be soldered to the host PCB. See section Secondary side connectors for more info about the J6 pads.

5.5.2 Mounting process

We strongly recommend the modules not being soldered more than 1 time after shipping from connectBlue and that the modules are mounted just before the host product is being soldered the last time. Although, connectBlue devices will withstand up to two reflows to an absolute maximum temperature of 250°C.

- The PCB in our modules is made of Isola PCL-FRP-370HR with Chemical Gold Pads.
- The modules are produced in a lead-free process with a lead-free soldering paste.
- It is recommended that the customers make their own electrical, climate, stress and vibration tests on the final assembled product to secure that the manufacturing process hasn't damaged or affected the module in any way.
- The modules are delivered without labels on each module when packaged on tape-and-reel. However, if they are delivered with labels on each module, the labels should be removed before the module is processed since the labels do not withstand the heat of soldering.
- The device recommended maximum re-flow temperature is 245°C for 10 sec.
- The device absolute maximum re-flow temperature is 250°C for 3 sec.

5.6 Antenna issues

The unit cannot be mounted arbitrary, because of the radio communication. The unit with an internal surface mounted antenna cannot be mounted in a metal enclosure. No metal casing or plastics using metal flakes should be used, avoid also metallic based paint or lacquer. Keep a minimum clearance of 10 mm between the antenna and the casing. Keep 10 mm free space from metal around the antenna. If a metal enclosure is required, one of the external antenna options has to be used. See section 3.2 for more information on the antenna options available.

6 WLAN information

In the tables below you can find information about WLAN properties.

Parameter	Data
Radio	Redpine Signals RS9110 + Airoha 8230
RF output power	802.11b (DSSS): +17dBm (typ.) 802.11g (OFDM): +15dBm (typ.) 802.11a (OFDM): +9dBm (typ.)
Receiver sensitivity	See table below
Receive input level (max)	-10 dBm
Output frequency 2.4GHz	2.412 - 2.462 GHz, channel 1 - 11 (FCC domain) 2.412 - 2.472 GHz, channel 1 - 13 (ETSI domain) 5 MHz channel separation
Output frequency 5GHz	5.180 - 5.240 GHz, U-NII-1, channel 36, 40, 44, 48 (FCC, IC, ETSI domain) 5.260 - 5.320 GHz, U-NII-2, channel 52, 56, 60, 64 (FCC, IC, ETSI domain) 5.500 - 5.700 GHz, U-NII-2e, channel 100, 104, 108,112, 116, 120, 124, 128, 132, 136, 140 (FCC, ETSI domain) 5.500 - 5.700 GHz, U-NII-2e, channel 100, 104, 108,112, 116, 132, 136, 140 (IC domain) TPC and DFS slave/client operation on 5.260 - 5.320 GHz, 5.500 - 5.700 GHz 20 MHz channel separation
Bluetooth co-existence	Basic 2-wire

6.1 Radio sensitivity OFDM

Data rate	802.11gn (channel 6, 2437MHz, dBm)	802.11an (channel 36, 5180MHz, dBm)
MCS7	-69	-68
MCS6	-70	-70
MCS5	-72	-72
MCS4	-76	-76
MCS3	-79	-79
MCS2	-82	-82
MCS1	-84	-83
MCS0	-87	-86
54	-73	-72
48	-75	-73
36	-78	-78
24	-83	-80
18	-85	-83
12	-87	-85
9	-88	-86
6	-89	-87

6.2 Radio sensitivity DSSS

Data rate	802.11b (channel 6, 2437MHz, dBm)
11	-86
5.5	-89
2	-91
1	-94

7 Regulatory information

7.1 Limitations

With current type approvals the module is allowed to operate on:

- 2.4 GHz ISM band
- 5 GHz U-NII band 1 (5.180 - 5.240 GHz)
- 5 GHz U-NII band 2 (5.260 - 5.320 GHz)
- 5 GHz U-NII band 2 extended (5.500 - 5.700 GHz)

Type approvals are valid for FCC, IC, and ETSI regulatory domains.

For U-NII band 2 (5.260 - 5.320 GHz) and U-NII band 2 extended (5.500 - 5.700 GHz) the module is allowed to operate as a DFS slave/client device.

7.2 Declaration of conformity

We, connectBlue AB, of
Norra Vallgatan 64 3V
SE-211 22 Malmö, Sweden

declare under our sole responsibility that our product:

- cB-0941 (OWL253i)
- cB-0941 (OWL253x)
- cB-0941 (OWS451i)
- cB-0941 (OWS451x)

to which this declaration relates, conforms to the following product specifications:

R&TTE Directive 1999/5/EC
EN 300 328 V1.7.1 (2006-10)
EN 301 893 V1.5.1 (2008-12)

EN 301 489-1 V1.8.1 (2008-04)
EN 301 489-17 V2.1.1 (2009-05)
EN 61000-6-2 (2005)

Safety Compliance
IEC 60950-1: 2005 (2nd Edition) and/or EN 60950-1: 2006

Medical Electrical Equipment

IEC 60601-1-2 : 2007

2011-03-11 Malmö, Sweden

Mats Andersson
CTO of connectBlue AB

If cB-0941 is used within EU a notification may be necessary to be made to each of the national authorities responsible for radio spectrum management of the intention to place radio equipment that uses frequency bands whose use is not harmonized throughout the EU, on its national market.
More information at: http://europa.eu.int/comm/enterprise/rtte/gener.htm

7.3 IC and FCC compliance

See Product variants for information about the different product variants.

7.3.1 IC compliance

This device complies with Industry Canada licence-exempt RSS standard(s).
Operation is subject to the following two conditions:

1. this device may not cause interference, and
2. this device must accept any interference, including interference that may cause undesired operation of the device.

Under Industry Canada regulations, this radio transmitter may only operate using an antenna of a type and maximum (or lesser) gain approved for the transmitter by Industry Canada. To reduce potential radio interference to other users, the antenna type and its gain should be so chosen that the equivalent isotropically radiated power (e.i.r.p.) is not more than that necessary for successful communication.

Within the band 5150 - 5250 MHz the operation of this device is restricted to indoor use to reduce the potential for harmful interference to co-channel mobile sattelite systems.

This equipment complies with IC RSS-102 radiation exposure limits set forth for an uncontrolled environment. This equipment should be installed and operated with minimum distance 20 cm between the radiator & your body.

7.3.2 Conformité aux normes d'IC

Cet appareil est conforme à la(aux) norme(s) RSS sans licence d'Industry Canada.
Son utilisation est soumise aux deux conditions suivantes :

1. Cet appareil ne doit pas causer d'interférences et
2. il doit accepter toutes interférences reçues, y compris celles susceptibles d'avoir des effets indésirables sur son fonctionnement.

Conformément aux réglementations d'Industry Canada, cet émetteur radio ne peut fonctionner qu'à l'aide d'une antenne dont le type et le gain maximal (ou minimal) ont été approuvés pour cet émetteur par Industry Canada. Pour réduire le risque d'interférences avec d'autres utilisateurs, il faut choisir le type d'antenne et son gain de telle sorte que la puissance isotrope rayonnée équivalente (p.i.r.e) ne soit pas supérieure à celle requise pour obtenir une communication satisfaisante.

Dans la bande de fréquences 5150 - 5250 MHz, le fonctionnement de cet appareil est limité à une utilisation à l'intérieur pour réduire le potentiel d'interférences brouillant les systèmes satellites mobiles d'un même canal.

Cet équipement respecte les limites d'exposition aux rayonnements IC RSS-102 définies pour un environnement non contrôlé. Il doit être installé et utilisé en maintenant une distance minimum de 20 cm entre le radiateur et votre corps.

7.3.3 FCC statement

This device complies with Part 15 of the FCC Rules. Operation is subject to the following two conditions:

1. this device may not cause harmful interference, and
2. this device must accept any interference received, including interference that may cause undesired operation.

This equipment has been tested and found to comply with the limits for a Class B digital device, pursuant to Part 15 of the FCC Rules. These limits are designed to provide reasonable protection against harmful interference in a residential installation. This equipment generates, uses and can radiate radio frequency energy and, if not installed and used in accordance with the instructions, may cause harmful interference to radio communications. However, there is no guarantee that interference will not occur in a particular installation. If this equipment does cause harmful interference to radio or television reception, which can be determined by turning the equipment off and on, the user is encouraged to try to correct the interference by one or more of the following measures:

- Reorient or relocate the receiving antenna
- Increase the separation between the equipment and receiver
- Connect the equipment into an outlet on a circuit different from that to which the receiver is connected

Consult the dealer or an experienced radio/TV technician for help.

7.3.3.1 End product labelling requirements

For an end product using the product cB-0941 there MUST be a label containing, at least, the following information:

This device contains FCC ID: PVH0941 IC: 5325A-0941

The label must be affixed on an exterior surface of the end product such that it will be visible upon inspection in compliance with the modular approval guidelines developed by the FCC.

7.3.3.1.1 FCC end product labelling

In accordance with 47 CFR § 15.19 the end product shall bear the following statement in a conspicuous location on the device:

"This device complies with Part 15 of the FCC Rules. Operation is subject to the following two conditions:

1. this device may not cause harmful interference, and
2. this device must accept any interference received, including interference that may cause undesired operation."

When the device is so small or for such use that it is not practicable to place the statement above on it, the information shall be placed in a prominent location in the instruction manual or pamphlet supplied to the user or, alternatively, shall be placed on the container in which the device is marketed. However, the FCC ID label must be displayed on the device.

In case, where the final product will be installed in locations where the end-consumer is not able to see the FCC ID and/or this statement, the FCC ID and the statement shall also be included in the end-product manual.

7.3.3.1.2 IC end product labelling

User manuals for licence-exempt LPDs shall contain the following or equivalent statements in a conspicuous position:

Operation is subject to the following two conditions:

1. this device may not cause interference, and
2. this device must accept any interference, including interference that may cause undesired operation of the device.

7.3.3.1.3 Étiquetage du produit final conforme à IC

Les manuels d’utilisation d’appareils de faible puissance, sans licence, feront figurer à un endroit bien visible les mentions suivantes ou équivalentes :

Son utilisation est soumise aux deux conditions suivantes :

1. Cet appareil ne doit pas causer d’interférences et
2. il doit accepter toutes interférences reçues, y compris celles susceptibles d’avoir des effets indésirables sur son fonctionnement.

7.3.3.2 Antenna

Our module cB-0941-02 are for OEM integrations only. In the end-user product the module shall be professionally installed in such a manner that only the authorized antennas can be used.

7.3.3.3 Caution

Any changes or modifications NOT explicitly APPROVED by connectBlue AB could cause the module to cease to comply with FCC rules part 15, and thus void the user's authority to operate the equipment.

Within the 5150 to 5250 MHz band (5 GHz radio channels 34 to 48) the module type cB-0941 is restricted to indoor operations to reduce any potential for harmful interference to co-channel MSS operation.

§15.407 statement; in case of absence of information to transmit or operational failure the module types cB-0941-02 will automatically discontinue transmission.

7.3.3.4 Ad-hoc frequencies

Module cB-0941 when operating under the definition of a client in 47 CFR §15.202 is preconfigured to use the most restrictive regulatory domain. For this reason the available operating frequency range is limited to channel 1 - 11 (2412 - 2462 MHz) for IEEE802.11b/g. For IEEE802.11a the available operating frequency range is limited to channels 36 - 48 (5180 - 5240 MHz).

7.3.3.5 RF-exposure statement

This equipment complies with FCC radiation exposure limits set forth for an uncontrolled environment. This equipment should be installed and operated with minimum distance 20 cm between the radiator & your body.

This equipment complies with IC RSS-102 radiation exposure limits set forth for an uncontrolled environment. This equipment should be installed and operated with minimum distance 20 cm between the radiator & your body.

Cet équipement est conforme aux limites d'exposition de rayonnement d'IC RSS-102 déterminées pour un environnement non contrôlé. Cet équipement devrait être installé et actionné avec la distance minimum 20 cm entre le radiateur et votre corps.

Any notification to the end user of installation or removal instructions about the integrated radio module is NOT allowed.

7.4 UL listing information

If a customer intends to UL list a product including the cB-0941 this information is useful.
The printed circuit board is produced according to the following specification:

- UL recognized ZPMV2 min. 130 °C flame class V-0 or better.

7.5 Compliance with RoHS directive

The cB-0941-02 are produced according to the RoHS (Restriction of the use of certain Hazardous Substances in electrical and electronic equipment) directive and complies with the directive.

8 Guidelines for efficient and safe use

8.1 General

Read this information before using your cB-0941 module.
For any exceptions, due to national requirements or limitations, when using your WLAN module cB-0941, please contact connectBlue AB.

> ⚠ Changes or modifications to the product not expressly approved by connectBlue AB will void the user's authority to operate the equipment.

8.2 Product care

- Do not expose your product to liquid or moisture.
- Do not expose you product to extreme hot or cold temperature.
- Do not expose your product to lit candles, cigarettes, cigars, open flames, etc.
- Do not drop, throw or try to bend your product since rough treatment could damage your product.
- Do not attempt to disassemble your product. Doing so will void warranty. The product does not contain consumer serviceable or replaceable components. Service should only be performed by connectBlue AB.
- Do not paint your product as the paint could prevent normal use.
- If you will not be using your product for a while, store it in a place that is dry, free from damp, dust and extreme heat and cold.
- The clearance and creepage distances required by the end product must be withheld when the module is installed.
- The cooling of the end product shall not negatively be influenced by the installation of the module when the module is installed.

8.3 Radio frequency exposure

The cB-0941-02 WLAN module contains a small radio transmitter and receiver.
During communication with other WLAN products the cB-0941 module transmits and receives radio frequency (RF) electromagnetic fields (microwaves) in the frequency range 2412 - 2462 MHz, 5180 - 5240 MHz, 5260 - 5320 MHz and 5500 - 5700 MHz.
The output power of the radio transmitter is very low.
When using the cB-0941, you will be exposed to some of the transmitted RF energy. This exposure is well below the prescribed limits in all national and international RF safety standards and regulations.

8.4 Electronic equipment

Most modern electronic equipment, for example, in hospitals and cars, is shielded from RF energy. However, certain electronic equipment is not. Therefore:

> ⚠ This equipment emits RF energy in the ISM (Industrial, Scientific, Medical) band. Please insure that all medical devices used in proximity to this device meet appropriate susceptibility specifications for this type of RF energy.

8.5 Potentially explosive atmospheres

Turn off your electronic device before entering an area with potentially explosive atmosphere. It is rare, but your electronic device could generate sparks. Sparks in such areas could cause an explosion or fire resulting in bodily injury or even death.
Areas with a potentially explosive atmosphere are often, but not always, clearly marked. They include fuelling areas, such as petrol station, below deck on boats, fuel or chemical transfer or storage facilities, and areas where the air contains chemicals or particles, such as grain, dust, or metal powders.

8.6 Safety compliance

In order to fulfill the safety standard EN 60950-1:2006 the WLAN module cB-0941 must be supplied by a Class-2 Limited Power Source.

8.6.1 Power supply

- Connect your power supply only to designated power-sources as marked on the product.
- To reduce risk of electric shock, unplug the unit from any power source before attempting to clean it.

9 Design examples

9.1 Basic design